PART NUMBER:
G2-36-X/X-1000X 1 2 2
1 LINE SIZE AS REQUIRED
2 A FOR AWS CLEVIS H FOR HLS CLEVIS S FOR SJ CLEVIS

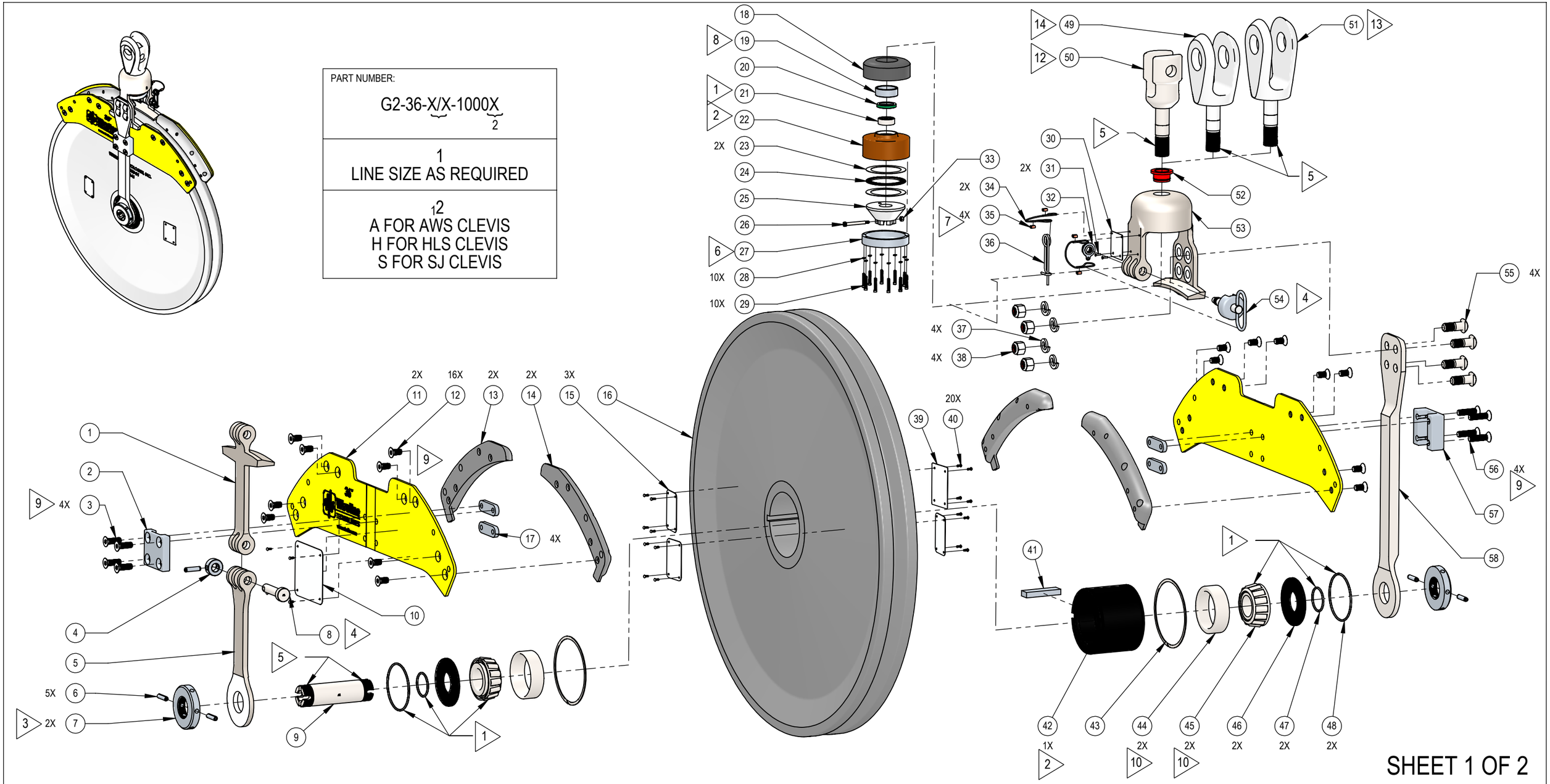

SHEET 1 OF 2

NOTES

- 1 PREPACK ALL BEARINGS AND O-RINGS WITH NO. 2 EP GREASE.
- 2 FILL THESE CAVITIES WITH NO. 2 EP GREASE.
- 3 PRELOAD BEARINGS BY TIGHTENING TO 250 IN. LBS. THEN TO NEXT HOLE.
- 4 LUBRICATE PINS W/ LIGHT MACHINE OIL.
- 5 COAT THESE THREADS WITH ANTI-SIEZE LUBRICANT (RS-098).
- 6 SEAL CAP TO HOUSING WITH BLUE RTV SILICONE GASKET MAKER (RS-097).
- 7 CRIMP FERRULES TO LANYARDS WITH CAM-ACTION COMPRESSION TOOL.
- 8 INSTALL RING INTO CENTER OF SHOCK CUSHION MIDWAY THROUGH.
- 9 COAT THESE THREADS WITH PERMATEX LOCKS STUDS (LTS-100).
- 10 CUP AND CONE PACKAGED TOGETHER.
- 11 PROOF TEST THESE LOAD BEARING COMPONENTS, THEN INSPECT PER DOC. #WTI-129.
- 12 FOR ATLAS CLEVIS OPTION.
- 13 FOR HALLIBURTON CLEVIS OPTION.
- 14 FOR SCLUMBERGER CLEVIS OPTION.

CONFIDENTIALITY

THIS DRAWING IS THE CONFIDENTIAL PROPERTY OF WIRELINE TECHNOLOGIES, INC. IT IS FURNISHED FOR YOUR INFORMATION ONLY AND MUST NOT BE MADE PUBLIC. IT MUST NOT BE COPIED AND MUST BE RETURNED ON DEMAND. MANUFACTURE OF PARTS PER THIS DRAWING IS EXPRESSLY FORBIDDEN EXCPEPT BY WRITTEN AUTHORIZATION FROM WIRELINE TECHNOLOGIES, INC. ALL RIGHTS OF DESIGN AND INVENTION ARE RESERVED AND PATENTS PENDING.

REVISIONS

#	DESCRIPTION	INITIAL	DATE
2	PLATE COLOR, LOGO AND CROSSOVER PART NUMBERS	AS	23-FEB-22
1	THREADED GATE PIN AND CAPTURED NUT	AS	22-JAN-19
NC			24-FEB-14

DRAWING APPROVAL

DEPARTMENT	NAME	INITIAL	DATE
DRAFTING	DUSTIN C.		
ENGINEERING	D. CARLSON		
QUALITY	G. VENT		
MANUFACT.	B. MACE		
OPERATIONS	R. VANCE		

Wireline TECHNOLOGIES
2140 NORTH REDWOOD ROAD #60
SALT LAKE CITY, UT 84116
TEL. (801) 323 - 5533 FAX. (801) 323 - 7033

36" G2 HEAVY DUTY SHEAVE ASSEMBLY

DWG # G2-36-1000 REV - 2

BILL OF MATERIALS

	ITEM NO.	PART NUMBER	DESCRIPTION	QTY.	MATERIAL	H T - SPEC
11	1	RS-36-1025	LOADING GATE - 36"	1	17-4 PH S/S	H-925
	2	G2-36-102	LOADING GATE BACKING PLATE	1	303 S/S	
	3	RS-48-1040	FLAT HD. CAP SC. 1/2"-13 X 1.5"	4	18-8 S/S	92210A716
	4	RS-36-1006	HINGE COLLAR	1	303 S/S	
11	5	RS-36-1024	GATE FRAME - 36"	1	17-4 PH S/S	H-925
	6	RS-36-1072	SPIRAL PIN 3/8" X 1 1/2"	5	420 S/S	
	7	RS-36-1011-A	AXLE NUT - ADJUSTABLE	2	303 S/S	
11	8	RS-36-1005	HINGE PIN - 36"	1	17-4 PH S/S	H-900
11	9	RS-36-1009	AXLE SHAFT	1	17-4 PH S/S	H-900
	10	RS-1780	GENERAL WARNING & INSPECTION LABEL	1	ALUM	ADHESIVE BACK
	11	G2-36-101	COVER PLATE	2	6061-T6 ALUM	HARD ANOD.
	12	G2-36-109	FLAT HD. CAP SC. 1/2"-13 X 1"	16	18-8 S/S	92210A712
	13	G2-36-105	LEFT SHROUD	2	6061-T6 ALUM	HARD ANOD.
	14	G2-36-106	RIGHT SHROUD	2	6061-T6 ALUM	HARD ANOD.
11	15	G2-180	REFLECTOR	3	ALUM	
	16	RS-36-1008-XX	WHEEL - 36" (XX - DENOTES GROOVE)	1	NYLON	M3
	17	G2-36-107	SUPPORT PLATE	4	303 S/S	
	18	RS-36-1018	SHOCK CUSHION	1	BUNA-N	90 DUROMETER
	19	RS-36-1019	CLEVIS RING	1	303 S/S	
	20	RS-36-1057	BEARING SEAL CR-12363	1	BUNA-N	
	21	RS-36-1056	NEEDLE ROLLER BEARING	1	ALLOY STEEL	TOR. B-208
	22	RS-36-1053	CLEVIS HOUSING	1	17-4 PH S/S	H-900
	23	RS-36-1058	THRUST WASHER	2	ALLOY STEEL	TOR. TRA-4458
11	24	RS-36-1059	THRUST BEARING	1	ALLOY STEEL	TOR. NTA 4458
	25	RS-36-1055	CLEVIS NUT	1	17-4 PH S/S	H-900
	26	RS-36-1078	HEX SOC. SHOULDER SC. 1/4" X 2"	1	ALLOY STEEL	91259A103
	27	RS-36-1050	HOUSING CAP	1	303 S/S	

		ITEM NO.	PART NUMBER	DESCRIPTION	QTY.	MATERIAL	H T - SPEC
		28	RS-36-1067	SPLIT LOCK WASHER #8	10	316 S/S	92147A009
		29	RS-36-1068	SOC. HD. CAP SC. #8-32 X 1 1/8"	10	18-8 S/S	92196A200
		30	RS-1179	WTI INSPECTION LABEL	1	ALUM	
		31	RS-1090	RIVET 1/8" X 1/2"	2	ALUM	97447A135
		32	RS-36-1140	CAPTURED NUT ASSY.	1		
		33	RS-1087	NYLON INSERT LOCKNUT 10-24	1	18-8 S/S	91831A011
		34	RS-1031	LANYARD 3/32"	2	18-8 S/S	
		35	RS-1032	COPPER FERRULE 3/32"	4	COPPER	
		36	RS-1399	SAFETY CLIP	1	18-8 S/S	
		37	RS-32/36-1036	SPLIT LOCK WASHER - 3/4"	4	18-8 S/S	92146A036
		38	RS-32/36-1037	NYLON INSERT LOCKNUT 3/4-16 UNF	4	18-8 S/S	91831A150
		39	RS-1077	MANUFACTURING LABEL	1	PAPER	LAMINATED
		40	RS-1071	DRIVE SCREW #6 X 3/8"	20	18-8 S/S	91654A146
		41	RS-36-1110	KEY	1	303 S/S	
		42	RS-36-1045	HUB	1	6061-T6 ALUM	HARD ANODIZE
		43	RS-32/36-1012	RETAINING RING 6" EXT.	2	SPRING STEEL	WS-600-S02
10		44	RS-36-1083	BEARING CUP	2	ALLOY STEEL	TIM. 32310*
10		45	RS-36-1084	BEARING CONE	2	ALLOY STEEL	TIM. 32310*
		46	RS-36-1007	O-RING SEAT	2	6061-T6 ALUM	HARD ANODIZE
		47	RS-36-1049	O-RING #226	2	BUNA-N	
		48	RS-36-1048	O-RING #243	2	BUNA-N	
14	11	49	RS-36-1652	CLEVIS - SCHLUMBERGER	1	17-4 PH S/S	H-1025
12	11	50	RS-36-1252	CLEVIS - AWS	1	17-4 PH S/S	H-900
13	11	51	RS-36-1552	CLEVIS - HALLIBURTON	1	17-4 PH S/S	H-1025
		52	RS-36-1020	FLANGED BUSHING	1	NYLON	W/ NYLUBE MO
	11	53	RS-32/36-1028	FRAME CUP CAST - 32"/36"	1	17-4 PH S/S	H-925
	11	54	RS-36-1633 K	THREADED GATE PIN	1		
		55	RS-32/36-1034	BOLT	4	17-4 PH S/S	H-1025
		56	G2-36-108	FLAT HD. CAP SC. 1/2"-13 X 2"	4	18-8 S/S	92210A720
		57	G2-36-110	FRAME STRAP BACKING PLATE	1	303 S/S	
	11	58	RS-36-1029	FRAME STRAP - 36"	1	17-4 PH S/S	H-925

SHEET 2 OF 2

NOTES

1. PREPACK ALL BEARINGS AND O-RINGS WITH NO. 2 EP GREASE.
2. FILL THESE CAVITIES WITH NO. 2 EP GREASE.
3. PRELOAD BEARINGS BY TIGHTENING TO 250 IN. LBS. THEN TO NEXT HOLE.
4. LUBRICATE PINS W/ LIGHT MACHINE OIL.
5. COAT THESE THREADS WITH ANTI-SIEZE LUBRICANT (RS-098).
6. SEAL CAP TO HOUSING WITH BLUE RTV SILICONE GASKET MAKER (RS-097).
7. CRIMP FERRULES TO LANYARDS WITH CAM-ACTION COMPRESSION TOOL.
8. INSTALL RING INTO CENTER OF SHOCK CUSHION MIDWAY THROUGH.
9. COAT THESE THREADS WITH PERMATEX LOCKS STUDS (LTS-100).
10. CUP AND CONE PACKAGED TOGETHER.
11. PROOF TEST THESE LOAD BEARING COMPONENTS, THEN INSPECT PER DOC. #WTI-129.
12. FOR ATLAS CLEVIS OPTION.
13. FOR HALLIBURTON CLEVIS OPTION.
14. FOR SCLUMBERGER CLEVIS OPTION.

CONFIDENTIALITY

THIS DRAWING IS THE CONFIDENTIAL PROPERTY OF WIRELINE TECHNOLOGIES, INC. IT IS FURNISHED FOR YOUR INFORMATION ONLY AND MUST NOT BE MADE PUBLIC. IT MUST NOT BE COPIED AND MUST BE RETURNED ON DEMAND. MANUFACTURE OF PARTS PER THIS DRAWING IS EXPRESSLY FORBIDDEN EXCPEPT BY WRITTEN AUTHORIZATION FROM WIRELINE TECHNOLOGIES, INC. ALL RIGHTS OF DESIGN AND INVENTION ARE RESERVED AND PATENTS PENDING.

REVISIONS

#	DESCRIPTION	INITIAL	DATE
2	PLATE COLOR, LOGO AND CROSSOVER PART NUMBERS	AS	23-FEB-22
1	THREADED GATE PIN AND CAPTURED NUT	AS	22-JAN-19
NC			24-FEB-14

DRAWING APPROVAL

DEPARTMENT	NAME	INITIAL	DATE
DRAFTING	DUSTIN C.		
ENGINEERING	D. CARLSON		
QUALITY	G. VENT		
MANUFACT.	B. MACE		
OPERATIONS	R. VANCE		

Wireline TECHNOLOGIES
2140 NORTH REDWOOD ROAD #60
SALT LAKE CITY, UT 84116
TEL. (801) 323 - 5533 FAX. (801) 323 - 7033

36" G2 HEAVY DUTY SHEAVE ASSEMBLY

DWG # G2-36-1000 REV - 2